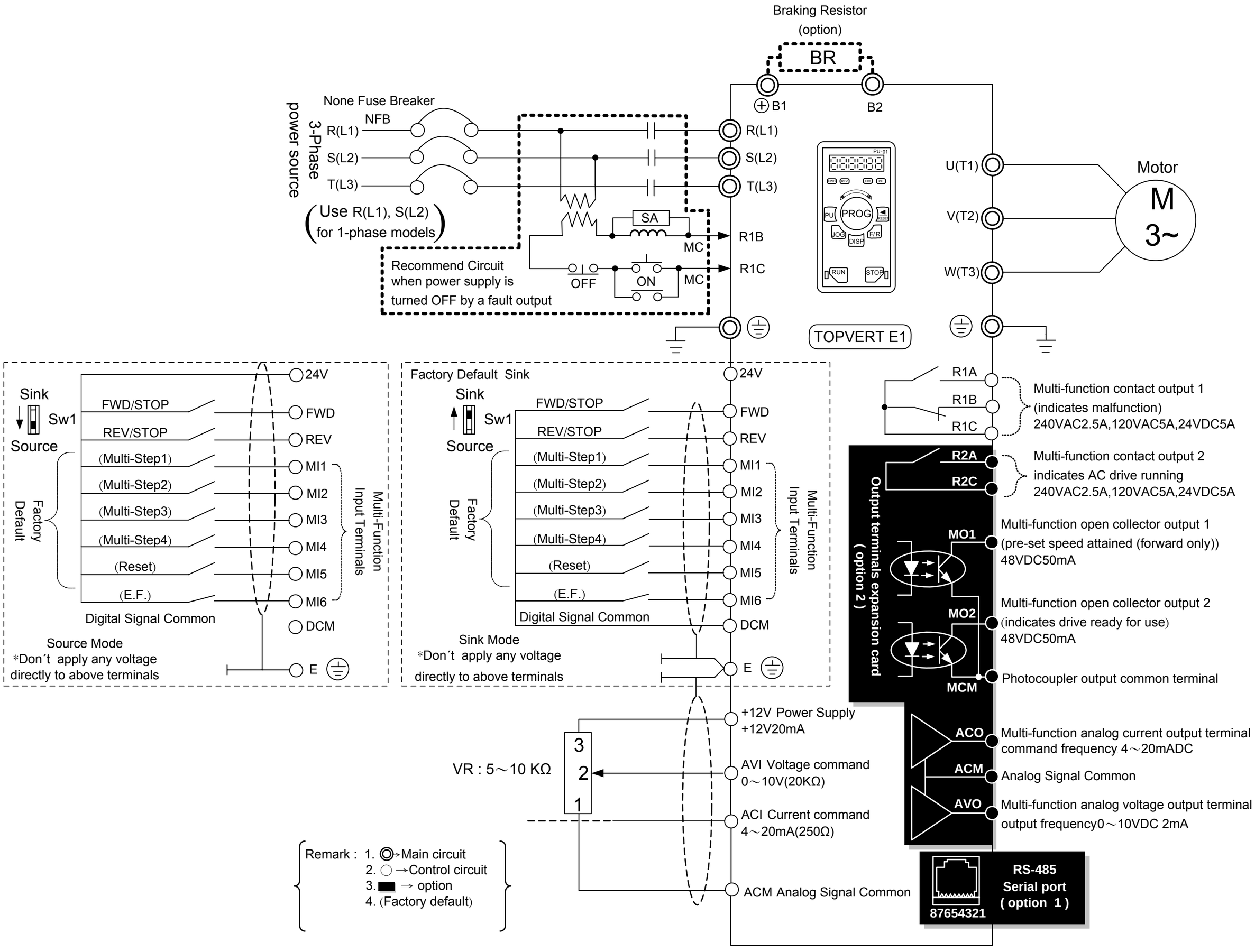

＊Definition on the Communication terminals：pin1:Reserved pin2:Reserved pin3:GND pin4:SG- pin5:SG+ pin6:+5V pin7:Reserved pin8:Reserved